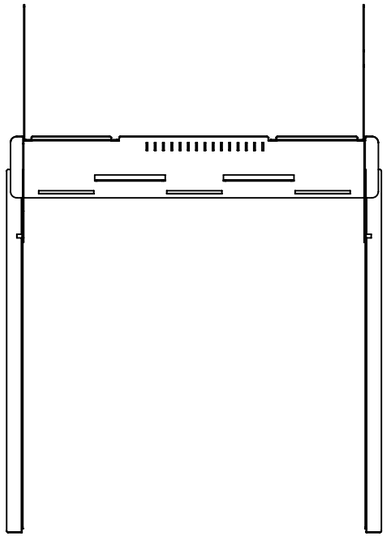

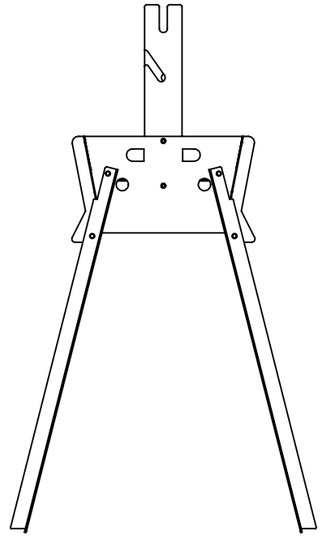

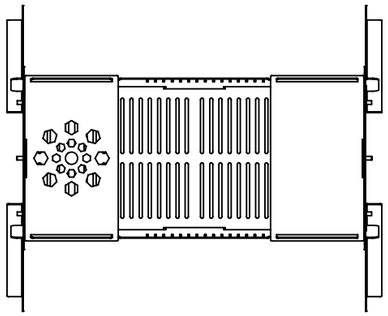

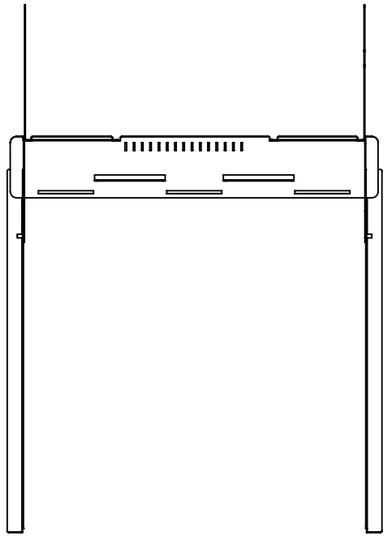

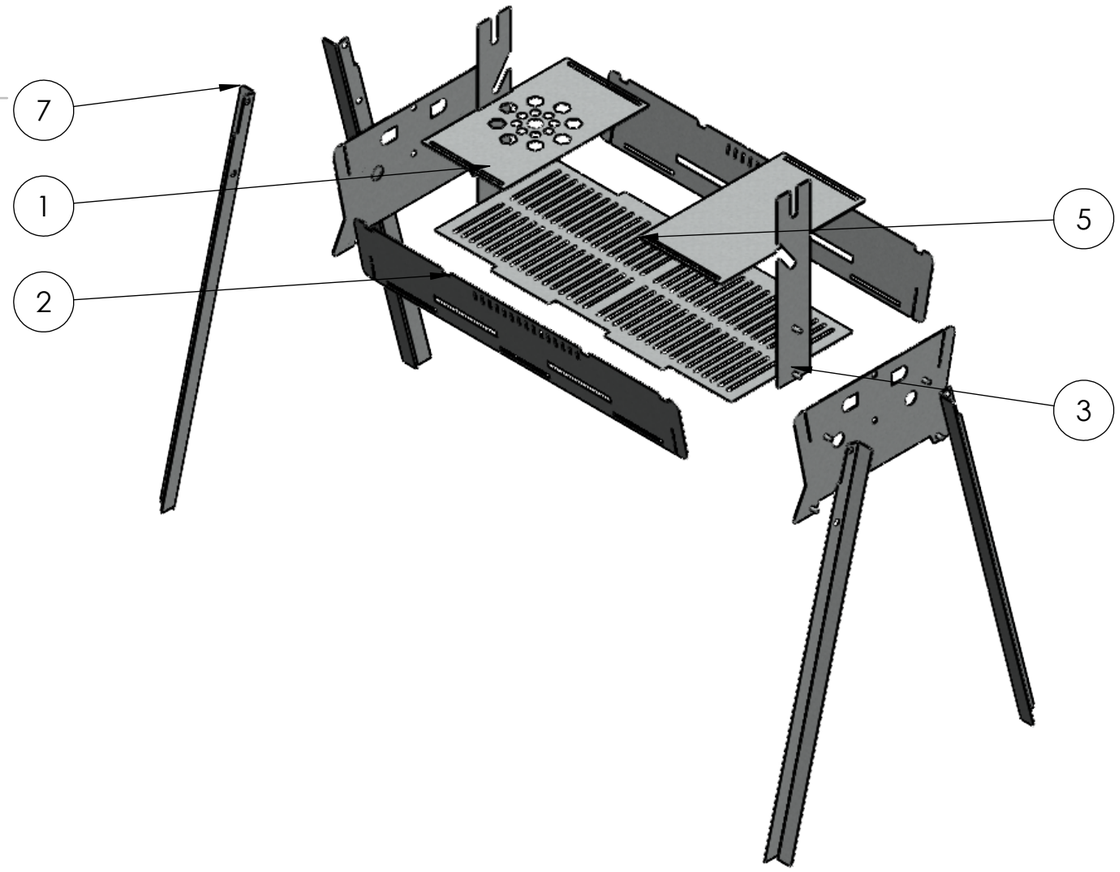


| ITEM NO. | PART NUMBER | QTY. |
|---|---|---|
| 1 | Side Part | 2 |
| 2 | wall | 4 |
| 3 | grill plate | 1 |
| 4 | STOVE PLATE 1 | 1 |
| 5 | STOVE PLATE 2 | 1 |
| 6 | Mirrorgrill lock | 2 |
| 7 | MirrorMirrorgrill lock | 2 |
| 8 | Sajji Stand | 2 |

UNLESS OTHERWISE SPECIFIED:
DIMENSIONS ARE IN MILLIMETERS
SURFACE FINISH:
TOLERANCES:
LINEAR:
ANGULAR:

FINISH:

DEBURR AND BREAK SHARP EDGES

DO NOT SCALE DRAWING

REVISION

| | NAME | SIGNATURE | DATE |
|---|---|---|---|
| DRAWN | DHEERAJ KUMAR | | |
| CHK'D | | | |
| APPV'D | | | |
| MFG | | | |
| Q.A | | | |

TITLE:

DHEERAJ KUMAR

MATERIAL:

WEIGHT:

DWG NO.

A3

SCALE:1:10

SHEET 1 OF 1

SOLIDWORKS Educational Product. For Instructional Use Only.